LEITENBERGER
Mess- und Regeltechnik GmbH
Bahnhofstraße 32/33
D-72138 Kirchentellinsfurt
Fon: +49 (0)7121/908-0
Fax: +49 (0)7121/908-200
E-Mail: mrt-info@leitenberger.de

02.48
Thermometer in Steel Sheet Case For Surface Mounting with Back Flange

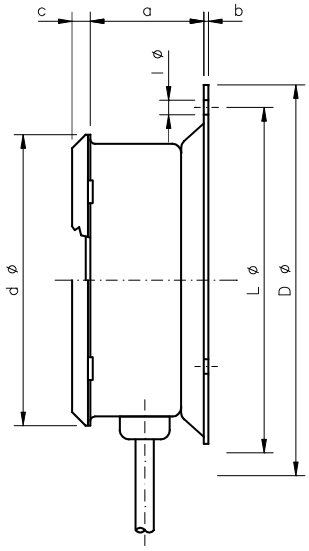

Type	a	b	c	d	D	l	L
1060 HBR/f	26	0,9	4	64	86	3,6	75
1080 HBR/f	26	0,9	4	84	110	3,6	95
1100 HBR/f	28	0,9	8	105	132	4,5	116

Case:	Steel sheet plastic coated, light grey
Mounting:	Surface mounting with back flange
Window:	Glass, clear, temperature resistant up to 65°C
Front ring:	NG 52, 60, 80 and 160 - chromed NG 100 - bezel chromed
Measuring System:	single bourdon spring system, without bimetal compensation with back adjustment
Scale:	White with black prints
Scale length:	Approx. 270 <°
Graduation:	1°, 2°, 5°, 10° depending on range
Range:	Between -80 ... +380 °C
Accuracy:	± 2% at 23°C ambient temperature
Pointer:	Black
Capillary connection:	Bottom
Protection:	IP 54 according DIN EN 60529 / IEC 529
Options:	- customized dial, coloured scale - drag pointer - case in black

ISO 9001:2008
Reg.no. 12 100 24343 TMS

© 2014 / Leitenberger